ENERGY MACHINES

# Heat Pump Datasheet

| | | |
|---|---|---|
| Models: | EMT-1285-1-4-ECO | EMT-1285-1-7-ECO |
| Refrigerant: | R1234ze | R515B |
| Certification: | CE | CE |
| Safety class: | A2L | A1 |

This Energy Machines™ EMT model contains a refrigerant circuit with an oil-free centrifugal turbocompressor. It is classified as a non-positive displacement compressor.

This model is equipped with an economizer heat exchanger, increasing its energy efficiency. The machine's evaporator and condenser are shell-and-tube heat exchangers. The evaporator operates with a flooded evaporation technique.

These components work together to create a powerful and efficient machine.

The heat pump is available with or without the outer casing.



## Characteristics

| Model characteristics | |
|---|---|
| Energy source | Ground, water, or waste heat |
| Compressor type | Turbo |
| Capacity control | Frequency controlled |
| Special features | Economizer, oil-free |
| Option | Additional external casing available on request |

## Performance

| Heating mode | |
|---|---|
| Heating capacity (kW) | 347 |
| Cooling capacity (kW) | 253 |
| COP | 3.68 |

| Cooling mode | |
|---|---|
| Heating capacity (kW) | 354 |
| Cooling capacity (kW) | 275 |
| COP | 3.44 |

*COP = Coefficient of performance*

## Design temperatures

| Heating mode | |
|---|---|
| Heated fluid (in/out) | 57°C / 63°C |
| Chilled fluid (in/out) | 12°C / 7°C |

| Cooling mode | |
|---|---|
| Heated fluid (in/out) | 37°C / 43°C |
| Chilled fluid (in/out) | 12°C / 7°C |

*Chilled fluid = water, Heated fluid = water*

## Flow and pressure drop

| Heating mode | | |
|---|---|---|
| | Heated fluid | Chilled fluid |
| Flow (l/s) | 13.82 | 12.09 |
| Pressure drop (kPa) | 19.7 | 30.1 |

| Cooling mode | | |
|---|---|---|
| | Heated fluid | Chilled fluid |
| Flow (l/s) | 14.09 | 13.14 |
| Pressure drop (kPa) | 20.7 | 35.5 |

*Chilled fluid = water, Heated fluid = water*

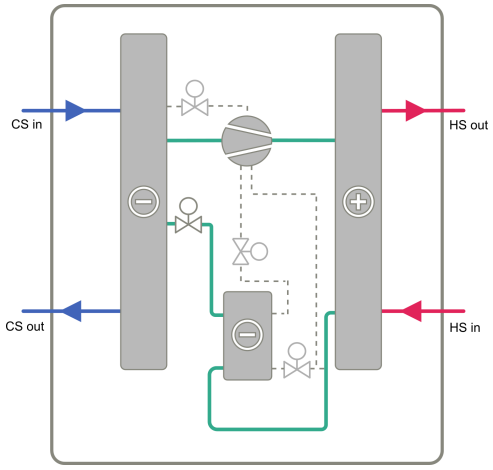

## Specifications

| Electricity | |
|---|---|
| Power supply voltage (VAC) | 400 |
| Power supply frequency (Hz) | 50 |
| Power supply phase (ϕ) | 3 |
| Rated power input (kW) | 100 |
| Rated current (A) | 150 |
| Fuse (A) | 200 |

| Dimensions* | |
|---|---|
| Length (mm) | 2950 |
| Width (mm) | 1210 |
| Height (mm) | 1945 |
| Dry weight (kg) | 2000 |
| Commissioned weight (kg) | 2400 |
| **See dimensional drawings for clearance requirements* | |

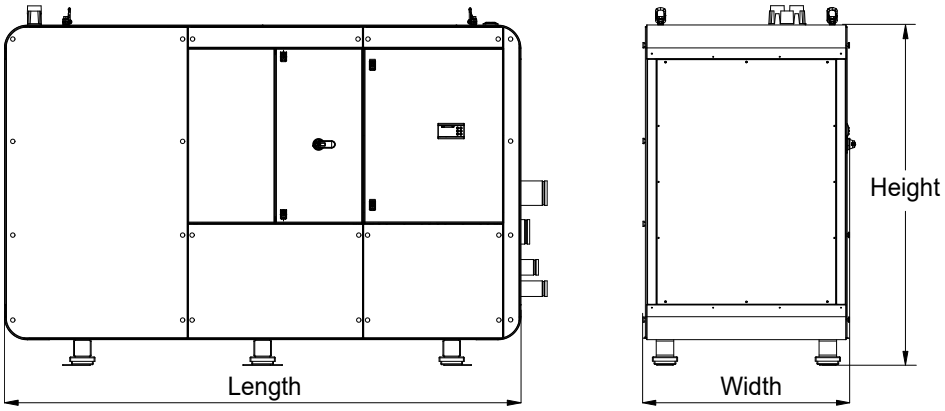


| Refrigerant | | |
|---|---|---|
| Model | EMT-1285-1-4-ECO | EMT-1285-1-7-ECO |
| Type | R1234ze | R515B |
| GWP value | 1.37 | 293 |
| Charge (kg) | | N/A |

*Energy Machines has a policy of continuous product and data improvement and reserves the right to change design and specifications without notice. While Energy Machines strives for accuracy, it does not guarantee the completeness or correctness of the information provided.*

ENERGY
MACHINES



**Energy Machines ApS Denmark** Nicolai Eigtveds Gade 26, 1402 Copenhagen | Niels Jernes Vej 14, 9220 Aalborg Ø
**Energy Machines Oy Finland** Emäsalontie 271, 06950 Emäsalo **Energy Machines Inc. USA** 110 East 25th Street, New York, NY 10010
**Energy Machines AB Sweden** Norra Skeppsbron 15, 803 10 Gävle | Regnbågsgatan 3, 417 55 Gothenburg
Mariehällsvägen 37 F, 168 65 Bromma | Hyllie Boulevard 34, 21532 Malmö

hello@energymachines.com | energymachines.com